DURAVIT

Circle # CE1060005010

Design by Duravit

3 Hole basin mixer



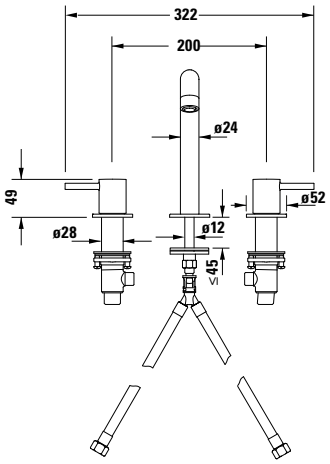

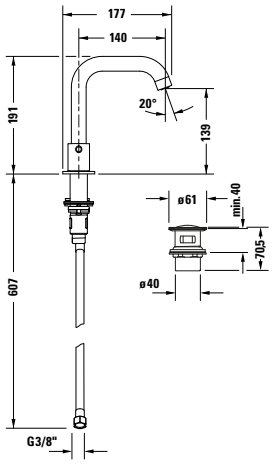

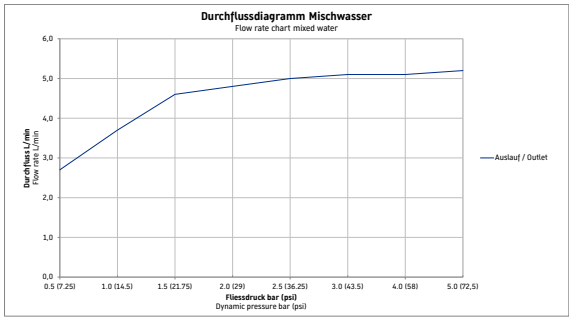

Basic information	
Long description	Duravit Circle 3 Hole basin mixer Chrome High Gloss – CE1060005010

Specifications	
Installation	
Type of mounting	deck-mounted
Temperature control	Ceramic cartridge
Outlet	Aerator with Easy-Clean
Flow rate (3 bar)	5 l/min
Noise class	I
Waste set	✓
Recommended operating pressure	1 bar
Max. recommended operating pressure	5 bar
colour	
colour value	Chrome
Gloss level	High Gloss
Operation	
Operation type	Mechanical

Features	
Handle version	lever handle

Logistics	
Product weight	2,16 kg

Dimensioning	
Height	191 mm
Projection	140 mm

Description texts	
Tender Text	Duravit Circle 3 Hole basin mixer Chrome High Gloss, Surface treatment: Chrome-plated, Shape: Round, Handle version: lever handle, Operation type: Mechanical, Outlet: Aerator with Easy-Clean, Technical features: EasyClean, Noise class: I, Flow rate (3 bar): 5 l/min, Recommended operating pressure: 1 bar, Temperature control: Ceramic cartridge, Dimension of connection hose: 3/8", Connection type for water supply connection: Flexible connecting hoses, EAN No.: 4067116104462, Product weight: 2,16 kg, Projection: 140 mm, Height of spout: 139 mm, Dimensions (width/length x Depth/Width x Height): 322 x 177 x 191 mm, Product no.: CE1060005010

All drawings contain the necessary measurements which are subject to standard tolerances. They are stated in mm and are non-binding. Exact measurements, in particular for customised installation scenarios, can only be taken from the finished piece.

Circle # CE1060005010

Design by Duravit

3 Hole basin mixer

You can find more information here

https://pro.duravit.com/p/CE1060005010

All drawings contain the necessary measurements which are subject to standard tolerances. They are stated in mm and are non-binding. Exact measurements, in particular for customised installation scenarios, can only be taken from the finished piece.